10-44 Tie-Down

Steel construction/zinc finish
360° base rotation
Available with/without mounting holes
Available with/without drain holes
2,500 lbs. break strength capacity*
830 lbs working load limit*

A. L. HANSEN MFG. CO.
PATENT

F10-44XXZNXX

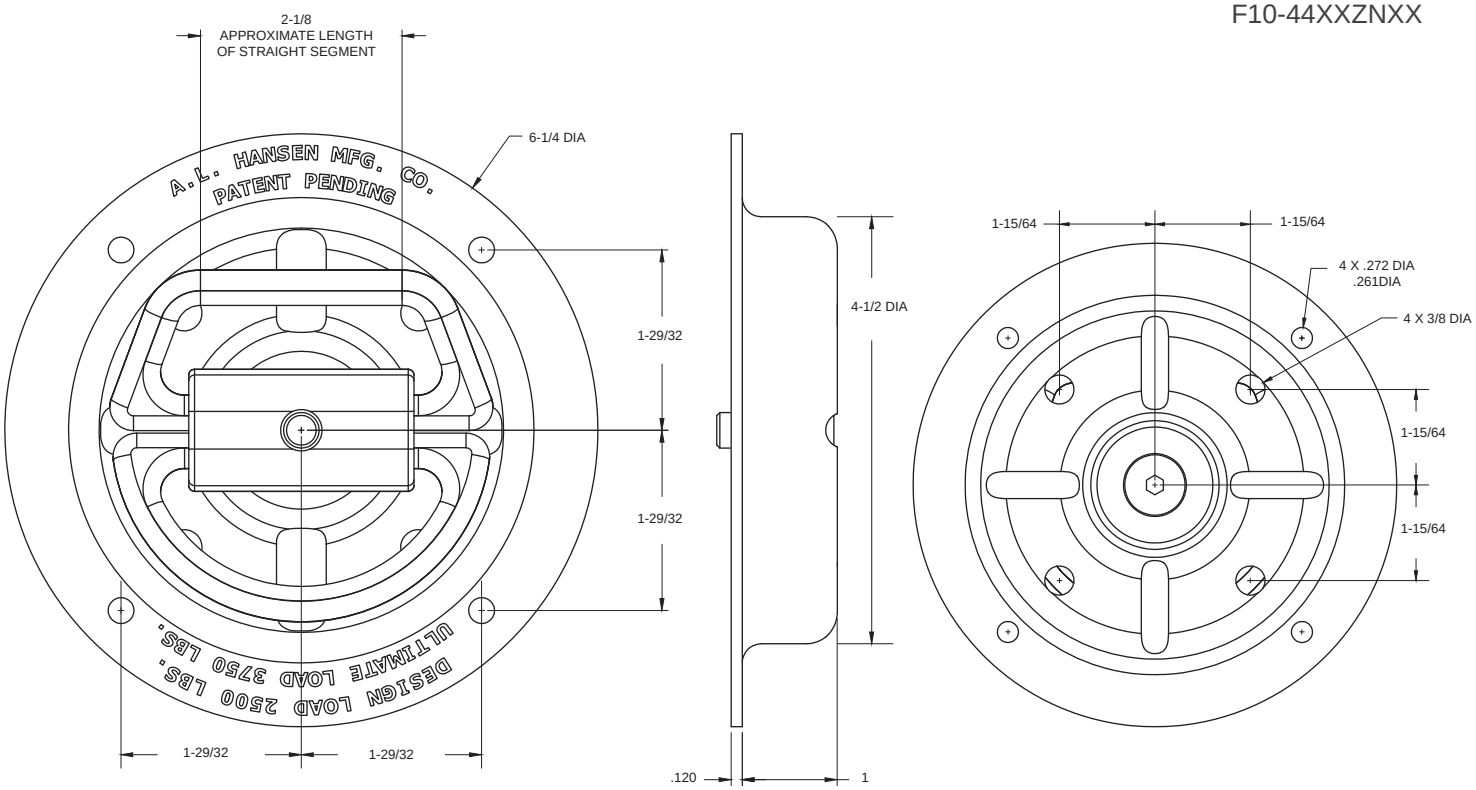

* Rating Paraneters: To provide a reliability factor to manufacturers for the differences between static testing and dynamic (real world) loading on load securement components, rating parameters have been established. Breaking Strength Capacity is the maximum load that an assembly will withstand before failing. Working Load limit (WLL) is defined as the maximum load that a component or assembly should receive during regular use. WLL is typically calculated as one-third (1/3) of Breaking Strength Capacity. (CVSA/FHWA out of service criteria) A working knowledge of the breaking strength capacity & working load limit (WLL) in securement assemblies is necessary to properly securing a load.